Apr.13th'10

MEASURING DISTANCE TYPE OBSTACLE DETECTION SENSOR PBS-03JT-V01

INSTRUCTION MANUAL

Be sure to read this instruction manual carefully before using to make correct operation of this device.

Be sure to read this instruction manual and keep properly.

Symbol	Amended reason				Pages	Date	Corrector	Amended No.
Approved by	Checked by	Drawn by	Designed by	Title	Measuring Distance Type Obstacle Detection Sensor PBS-03JT-V01 Instruction Manual			
KAMITANI	MAEDA	UOTANI	MAEDA	Drawing No.	C-41-2430			1/19

- NOTICE -

○Please keep this instruction manual on the side of operator and maintenance person.
○Be sure to read this instruction manual and relative documents before installation, operation and maintenance and operate correctly in accordance with the directions on the knowledge of the device, information for safety, operation and handling method of this device.
○Keep always the scope of this various specification described on the instruction manual and execute correct maintenance to prevent possible malfunction.
○Don't remodel or break up by yourselves. We never repair them and never do guarantee of quality.
○When you have incomprehensible item, question and unclear point, please contact to our branch office referred the last page.
○On the contents of this instruction manual we have intellectual property right. The contents may not, in whole or part be revealed to any third party without prior written consent from us.
○The contents in this instruction manual is subject to change without pre-notice for the purpose of improvement of the device.
○In case of happening inactivity or malfunction, please contact to our referred branch office with the following information.
・The contents of relative name plate or specifications(model name, production No., type, production date etc.)
・Abnormal condition(more in detail including condition before and after)
・Ask our offices.

Notice of safety

Be sure to read carefully this instruction manual and relative documents before installation, operation and maintenance of this device to operate correctly. Operate this device only after acquainting yourself all with knowledge of device, safety notice and caution items. This instruction manual classifies caution items rank as 「Danger」,「Caution」「Prohibition」 and 「Enforcement」.

DANGER	Possible to cause a danger situation if mis-used and might be dead or critical injury
CAUTION	Possible to cause a danger situation if mis-used and might be harmed middle injury or slight injury or caused only physical damage
PROHIBITION	Supposed to cause a possible danger if mis-used and inform an action prohibited.
ENFORCEMENT	Supposed to cause a possible danger if mis-used and inform an action enforced.

About statement of above ⚠CAUTION however, it is possible to cause more serious result according to situation. Keep the above mentioned notice without fail since these are very important.

Notice of safety(to be continued)

* The critical injury stated above means causing after effect by loss of eyesight, injury, burn(high temperature, low temperature), electric shock, fracture, poisoning etc., and necessity of hospitalization or long time attending to hospital for care. The middle injury or slight injury means injury, burn, electric shock etc. which are not necessary of hospitalization or long time attending to hospital for care. The physical damage means damage of property and equipment and enlarged damage relevant to damage of equipment.

* These notice for safety informs more important supplementary contents regarding to HOKUYO Obstacle Detection sensor. The customers should establish the safety measure according to various standards and criteria for the sake of safety operation and maintenance of equipment & device.

The following danger mark is for HOKUYO Obstacle Detection Sensor. If this danger instruction may not be kept, it is possible to cause an accident resulting injury or death. Please note that the order of this instruction is never adopted order in important level and instruction stated here are all important matter.

DANGER	Pages
* This product is auxiliary safety device and isn't complete safety device. When device is used for application that may occur serious accident, make sure to prepare other safety device such as bumper sensor etc. Also, take necessary measures such as backup circuit etc.	5
* This sensor is possible to cause malfunction or mis-detection by reasons of strong disturbance light, electric noise or mechanical vibration.	6
* Make sure that the power source is off when maintenance and inspection.	6
* Take caution to handle the device and don't hit against or drop off.	6
* This device can't detect a dead space of view in beam scanning angle. If necessary detecting area isn't enough, don't use it.	6,13

The following caution mark is for HOKUYO Obstacle Detection sensor. If this caution instruction may not be kept, it is possible to cause an accident resulting injury or death. Please note that the order of this instruction is never adopted order in important level and instruction stated here are all important matter.

CAUTION	Pages
* Be sure to read the instruction manual carefully before servicing this device. Be sure to reach the instruction manual to final user and be sure to keep the instruction manual by final user.	4
* This device doesn't operate for approx. 1 sec after putting power source on. Don’t use during this period.	6
* Use power source with 2A or more, current capacity. Inrush current flows when putting power source in. Voltage min. and max. value is 12 to 24VDC.	6
* Avoid to install at the places where strong light over rated enters into reception part. It may cause mis-operation.	6
* It takes approx. 1sec. from releasing emission-stop input to rebooting.	9
* If 2-scanning mode is used, response time is getting slower.	9
* If area is changed by outer input, response time is getting slower.	9
* Min. detectable object is getting larger under mirror reflecting avoidance mode.	10
* It can set detecting range up to 10m under within 218 degrees but we can't guarantee it.	13
* Area from scanning center of sensor to 0.2m is dead zone and it can't detect.	13
* When installation, don’t close light-projection/reception window or interrupt area.	14
* If cover is used, use cover with high transparency.	14
* Response time is delayed under much mutual interference	16

Notice of safety(to be continued)

The following prohibition mark is for HOKUYO Obstacle Detection Sensor. If this prohibition instruction may not be kept, it is possible to cause an accident resulting injury or death. Please note that the order of this instruction is never adopted order in important level and instruction stated here are all important matter.

PROHIBITION	Pages
* Don't decompose this device. It may cause any troubles by short-circuit. Moreover it may cause malfunction of device out of warranty.	6
* Keep this device out of soaking in water, oil or scales. Light-receiving amount is reduced and it may cause mis-detection. Also, inner circuit corrodes and it may cause any troubles.	6
* Don't install or keep this device at the place where over rated heat, vibration or shock. It may cause any troubles or malfunction.	6
* Avoid to use under solvent vapor and corrosive gas.	6
* Response time is delayed on 2-scanning operating mode under much mutual interference. Don't use 2-scanning operating mode.	15
* Don't connect any other cable to RS232C signal cable except when detecting area is set by PC.	16

The following enforcement mark is for HOKUYO Obstacle Detection Sensor. If this enforcement instruction may not be kept, it is possible to cause an accident resulting injury or death. Please note that the order of this instruction is never adopted order in important level and instruction stated here are all important matter.

ENFORCEMENT	Pages
* Clean up lens surface of both light-projecting and receiving part with soft cloth periodically. When light-projecting and receiving part are dirty, it can't keep specific detection area.	7
* Don't make a wiring with power line such as driven motor or break.	7
* Earth frame ground terminal to the body when switching regulator is used as power source.	7
* Connect unused input cable to input common +(Red) or open it. Connect unused output cable to output common –(Gray) or open it.	11
* Be sure to adjust, checking detection area data and real time data with application software for PC setting when PC model. Make sure to check some operations after setting.	11
* Make a optical axis adjustment and check some operations before use.	14
* Install firmly not to dislocate optical axis by vibration or impact.	14

Introduction

CAUTION
* Be sure to read the instruction manual carefully before servicing this device. Be sure to reach the instruction manual to final user and be sure to keep the instruction manual by final user.

General

(1) Operating principle

Operating principle is that semicircular field is scanned by LED(lambda = 880nm) and the coordinates is calculated by measuring distance to object and its step angle and it detects obstacle in setting area.

(2)Detecting area setting

Shape of detecting and setting value can be changed by PC(RS-232C). Detecting distance with 3 steps output for each detecting area can be set.

(3)Detecting area changeover

Max. 15 kinds of area changeover that was set by PC beforehand can be made by outer bit input.

(4)Trouble output

This device provides self-diagnosis function such as LED emission or motor revolution trouble and this output executes when such trouble.

2.Structure(Light scanning image)

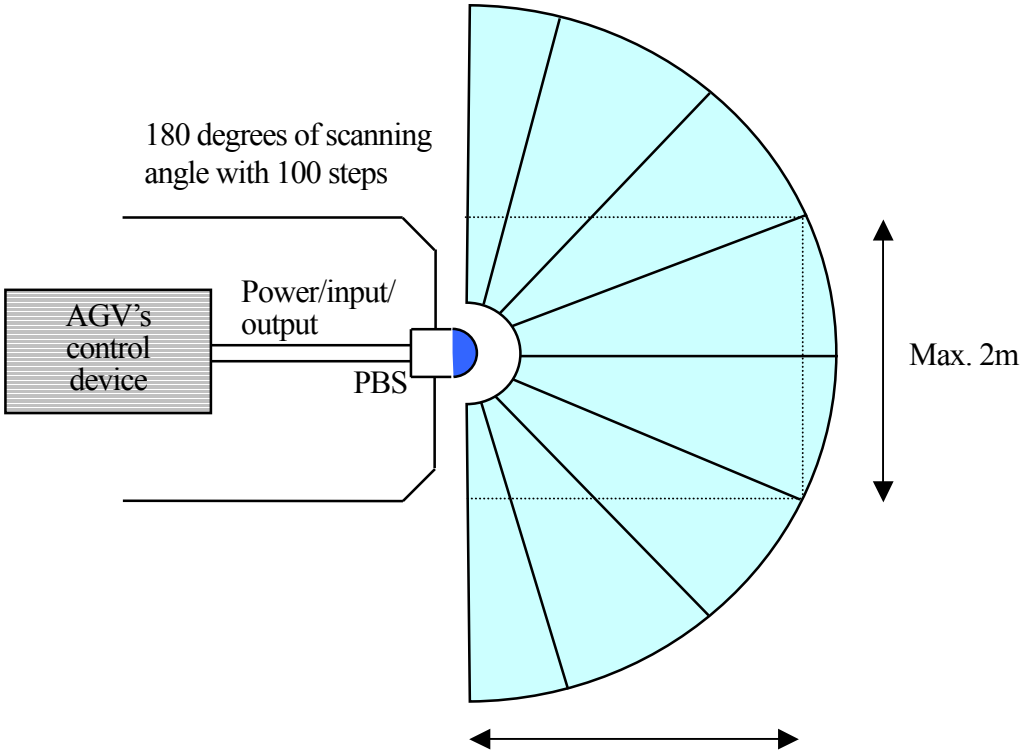

DANGER

* This product is auxiliary safety device and isn't complete safety device. When device is used for application that may occur serious accident, make sure to prepare other safety device such as bumper sensor etc. Also, take necessary measures such as backup circuit etc.

< Contents >

1. Caution for handling

It may cause misdetection even out of detection area because of characteristics in case that there is strong light from mirror surface or retro-reflection plate. In that case, take measures to avoid such situation.

DANGER

* This sensor is possible to cause malfunction or mis-detection by reasons of strong disturbance light, electric noise or mechanical vibration.
* Make sure that the power source is off when maintenance and inspection.
* Take caution to handle the device and don't hit against or drop off.
* This device can't detect a dead space of view in beam scanning angle. If necessary detecting area isn't enough, don't use it.

CAUTION

* This device doesn't operate for approx. 1 sec after putting power source on. Don't use during this period.
* Use power source with 2A or more, current capacity. Inrush current flows when putting power source in. Voltage min. and max. value is 12 to 24VDC.
* Avoid to install at the places where strong light over rated enters into reception part. It may cause mis-operation.

PROHIBITION

* Don't decompose this device. It may cause any troubles by short-circuit. Moreover it may cause malfunction of device out of warranty.
* Keep this device out of soaking in water, oil or scales. Light-receiving amount is reduced and it may cause mis-detection. Also, inner circuit corrodes and it may cause any troubles.
* Don't install or keep this device at the place where over rated heat, vibration or shock. It may cause any troubles or malfunction.
* Avoid to use under solvent vapor and corrosive gas.

ENFORCEMENT

* Clean up lens surface of both light-projecting and receiving part with soft cloth periodically. When light-projecting and receiving part are dirty, it can't keep specific detection area.
* Don't make a wiring with power line such as driven motor or break.
* Earth frame ground terminal to the body when switching regulator is used as power source.

2. Specifications

Model No.	PBS-03JT-V01
Power source	12 to 24VDC (ripple within 10%)
Current consumption	500mA or less(200mA or less when emission stops) (Note) Except for I/O terminal current and rush current(500mA)
Detectable object and detecting distance	White kent paper with 300×300mm(Placed in parallel with sensor projecting/ receiving surface) Area with vertical direction 0.2 to 3m and width 2m(Origin point is scanning center position) but within scanning angle 180 degrees
Hysteresis	It specifies the width when each area setting(Original value : 10%) 10% of detecting distance(It is not getting 60mm or less) 5% of detecting distance(It is not getting 30mm or less)
Input	Photo coupler input(common Anode) voltage range: 12 to 24VDC
Output(Note)	Photo-coupler/open-collector output(30VDC 50mA Max.) Output 1 : ON when detected in area Output 2 : ON when detected in area Output 3 : ON when detected in area Trouble output : OFF during normal operation (Note) Output 1 to 3 show the state it is detecting object when this output executes
Response time	Normal operating mode : 180ms or less(Scanning time 100ms/1 rev.) Low-speed scanning mode : 200ms or less(Scanning time 110ms/1 rev.) 2-scanning operating mode : the above time + each scanning time Note) When area changeover, further 1 scanning time is delayed.
Starting time	Within 1s after putting power source on or stopping LED emission
Lamps	Power lamp(Green) : Flickers when troubled Output 1 lamp(Orange) : Lights up when detected in area Output 2 lamp(Orange) : Lights up when detected in area Output 3 lamp(Orange) : Lights up when detected in area
Connection method	Lead wire 1m long
Ambient illuminance	Halogen/mercury lamp : 10000lux or less Fluorescent lamp : 6000lux(Max. illuminance) Note) It may malfunction when receiving strong light such as sun light etc.
Ambient temperature/ humidity	-10 to +50 degrees C, 85%RH or less(Not condensing and icing)
Vibration resistance	10 to 55Hz, double amplitude 1.5mm Each 2 hour in X, Y and Z directions
Impact resistance	490m/s^2(50G) Each 10 time in X, Y and Z directions
Protective structure	IP64
Weight	500g
Life	5 years during normal temperature(motor life)
Material	Front case : Polycarbonate, rear case : ABS

About detecting characteristics

If reflectance is extremely bad(mourning dress or oil-stained working clothes etc.), it is impossible to measure even if detection distance is within 1m. Also, it can't detect mirror-surface objects such as stainless polished surface stably. Detecting precision(Reference value) is +/- 0.1m up to 1m and is +/- 0.1 time against the distance at 1m or more in case of kent paper with 300×300mm. Detecting error with lower reflectance is getting larger. We recommend to test with a sample.

2. Specifications(Continued)

Setting of detecting area	Setting of output 1 : It is free to set from 0 to 10m for optical axis direction with 7 points pointer. Setting of output 2 : Linear setting to progressive direction Fan-shaped setting to optical axis direction Percentage(%) setting against output 1 pointer Setting of output 3 : Same as output 2
Operating mode	2-scanning mode(When each detecting area setting, it sets individually for output 1 to 3.) It judges existing obstacle with continuous 2-scanning It judges with 1 scanning under normal operating
	Mirror reflecting avoidance mode(It sets when each detecting area setting) It hardly detects the objects with high reflectance 20m away but min. detecting width at 3m is getting 400mm.
	Low-speed scanning mode(Set by software switch) Scanning time 110ms(100ms when normal operating) Response delay by mutual interference with PBS with normal operating is made Within 1 scanning.
Input and each area	Photo-coupler input(Anode common, Each input ON current 4mA) Setting detecting area changeover Set area No. by [Input 1], [Input 2], [Input 3] and [Input 4] Stop emission by getting all [Input 1], [Input 2], [Input 3] and [Input 4] to ON (OFF : H level input, ON : L level input)

[Input 1]	[Input 2]	[Input 3]	[Input 4]	Area patterns
ON	ON	ON	ON	Emission stop
OFF	ON	ON	ON	Area 1
ON	OFF	ON	ON	Area 2
OFF	OFF	ON	ON	Area 3
ON	ON	OFF	ON	Area 4
OFF	ON	OFF	ON	Area 5
ON	OFF	OFF	ON	Area 6
OFF	OFF	OFF	ON	Area 7
ON	ON	ON	OFF	Area 8
OFF	ON	ON	OFF	Area 9
ON	OFF	ON	OFF	Area 10
OFF	OFF	ON	OFF	Area 11
ON	ON	OFF	OFF	Area 12
OFF	ON	OFF	OFF	Area 13
ON	OFF	OFF	OFF	Area 14
OFF	OFF	OFF	OFF	Area 15

2. Specifications(Continued)

Input response time	Input taking-in cycle : 1 scanning time(100ms or 110ms) (When selecting emission stop by external input, input taking-in cycle is 1msec)

(Note) It can set detecting area up to 10m but it isn't under our guarantee.

3. Functions

3-1. How to set detecting area

It can set detecting area which was made by software with serial input/output.

3-2. Stop emission

When this sensor is not required in the places where AGV stops etc., we recommend to use emission-stop function because of preventing the interference. Scanning revolution and emission of LED stop when all input(1 to 4) are getting ON(L level).

CAUTION

It takes approx. 1sec. from releasing emission-stop input to rebooting.

3-3. Setting detection area pattern changeover

Setting detection area pattern can be changed with [Input 1], [Input 2], [Input 3] and [Input 4].

CAUTION

*** If area is changed by outer input, response time is getting slower.(Changeover time with approx. 100 to 110msec is added to response time.)**

3-4. Trouble output

When revolution of scanner(Motor) stopped or it didn't receive LED's beam as standard emission light, trouble output(Output 4) executes. Also, output 1, 2 and output 3 is the state it is detecting any obstacle. and power lamp flickers with 1 sec interval.

3-5. 2-scanning operating mode

Normal mode executes output with 1 scanning result but this mode executes output with 2-scanning continuous result and so malfunction by unstable reflective light hardly cause.

⚠ **CAUTION**
* If 2-scanning mode is used, response time is getting slower. * In case of light interference, response time is widely delayed under 2-scanning mode.

3-6. Low-speed scanning mode

Scanning time is getting 110msec. This is used for holding response delay by mutual Interference(When PBS's face each other) within 1 scanning.

CAUTION

*** If low-scanning mode is used, response time is getting slower.**

3-7. Hysteresis changeover

When it sets detecting area near wall, make hysteresis small. If wall surface is within hysteresis range of detecting area, output doesn't return.(After AGV or human being passed detecting area, it detects wall surface and AGV can't move.)

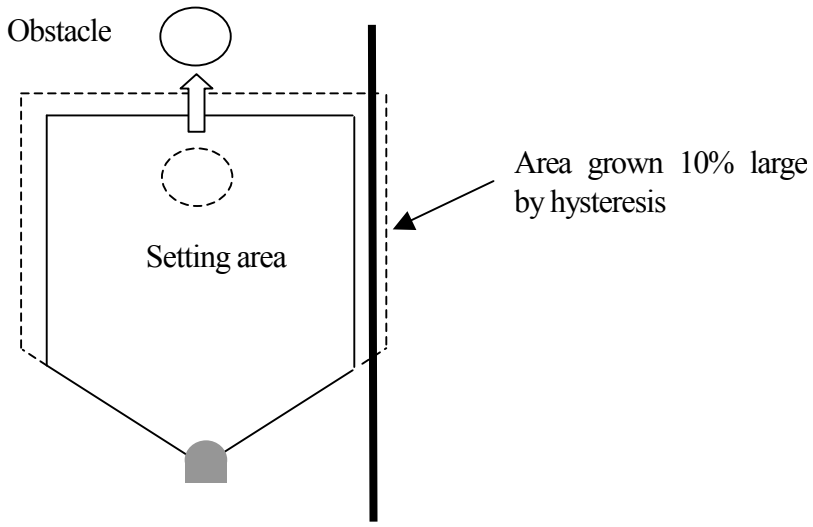

3-8. Mirror reflecting avoidance mode

If there are polished stainless plate or retro-reflective plate about 20 meter along, it may malfunction because of multi-reflection. Mirror reflecting avoidance mode reduces frequency of malfunction. If detecting object is too small, it can't detect under this mode and so it takes 5 degrees as installing angle of PBS.(Refer to Caution for installation.)

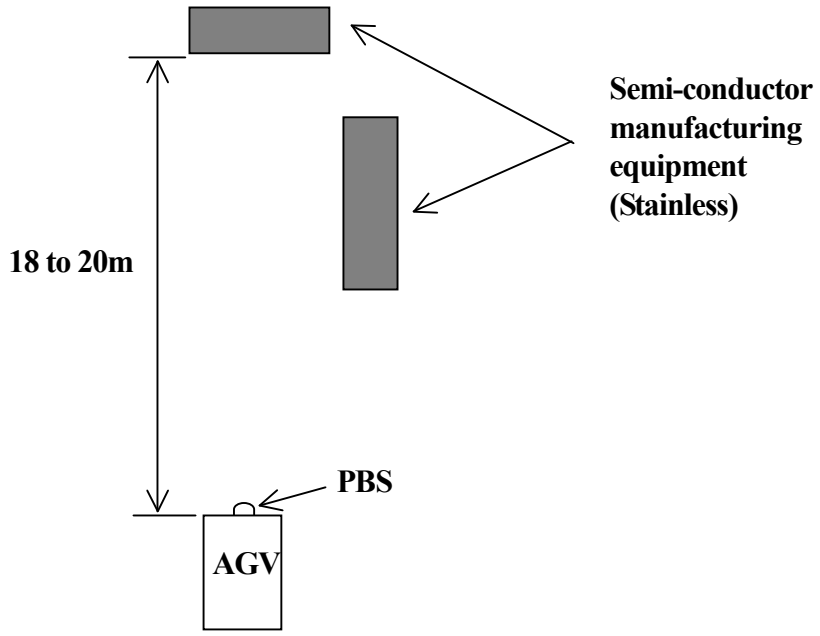

CAUTION

<u>* Min. detectable object is getting larger under mirror reflecting avoidance mode.</u>

4. Connection and operating

4-1. Colors and signals

Colors	Functions
Black	Output 1
White	Output 2
White(Blue)	Output 3
Orange	Trouble output
Gray	Output common minus
Red	Input common plus
Green	Input 1
Yellow	Input 2
Purple	Input 3
White(Yellow)	Input 4
Brown	+VIN
Blue	-VIN
Yellow(Red)	Serial input(RXD)
Yellow(Green)	Serial output(TXD)
Yellow(Black)	Serial GND

Colors in parenthesis indicate ink color of both sides line printing. Input/output direction is mentioned on the basis of PBS.

ENFORCEMENT

* Connect unused input cable to input common +(Red) or open it. Connect unused output cable to output common –(Gray) or open it.

4-2. Operating lamp

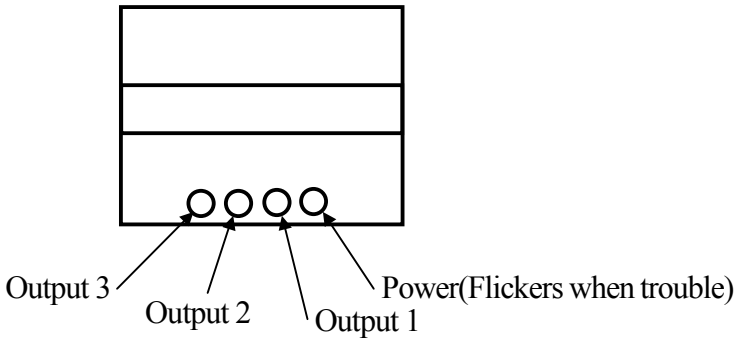

5. Detecting area setting

5-1. Detecting area setting software

Start application software and set detection area with mouse or numerical input, referring monitor of PC. It is convenient to make a fine adjustment of detection area because of checking operating state with monitor of PC. Each setting area can be saved in file. See instruction manual of software application in details.

ENFORCEMENT

Be sure to adjust, checking detecting area data and real time data with application software. Check operating state after setting.

5-2. Origin of detecting area setting

Origin point(X=0, Y=0) of detecting area setting is the center position of beam scanning.

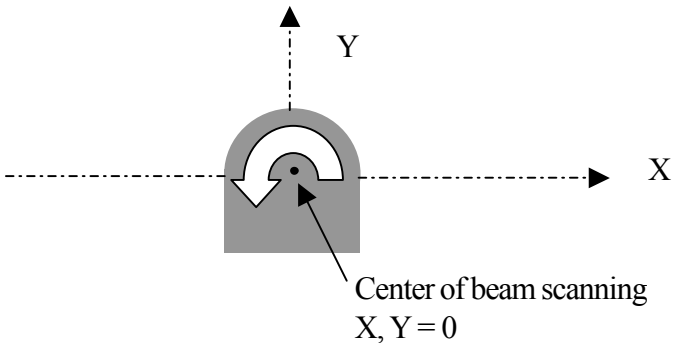

5-3. Setting not for detecting the wall

Set detection area 100mm or more away from the wall. After checking operating state with detection area setting software, adjust and change detecting area. PB9 is scanned by driving the mirror with pulse motor. Make a far area setting as follows by considering step error because step error of pulse motor is +/- 0.9 degrees.

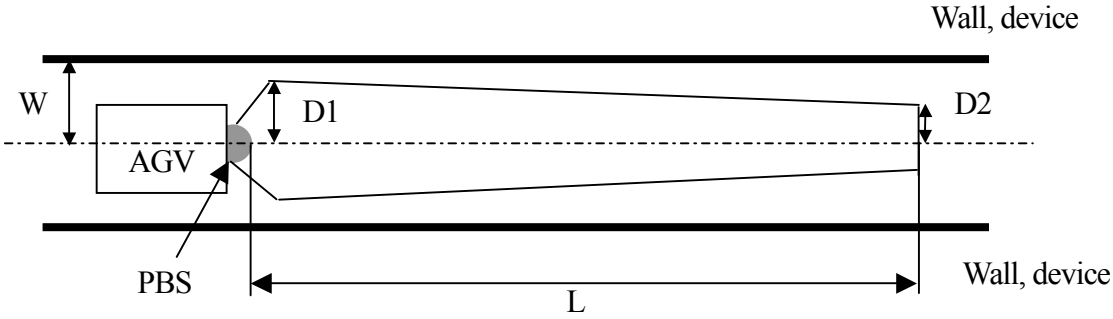

When width of passageway is 2W and max. detecting distance is L, calculate the area width of short distance and long distance as follows:-

D1(mm) = W – 100
D2(mm) = D1 – L*tan(0.9 degrees) tan(0.9 degrees) = 0.016

5-4. Detection guarantee range and detection area diagram

Scanning setting available range

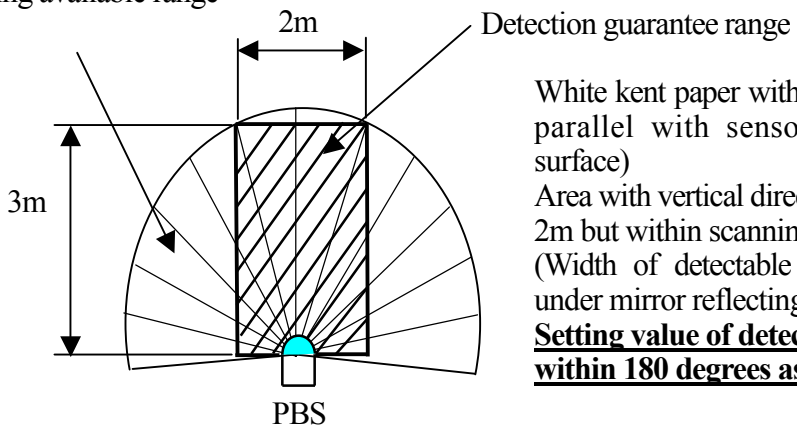

White kent paper with 300×300mm(Placed in parallel with sensor projection/reception surface)
Area with vertical direction 0.2 to 3m and width 2m but within scanning angle 180 degrees
(Width of detectable object is getting larger under mirror reflecting avoidance mode.)
Setting value of detection area should be set within 180 degrees as detection range.

There are the following 3 kinds of detecting area setting for output 2 and output 3 and it can be free to select.

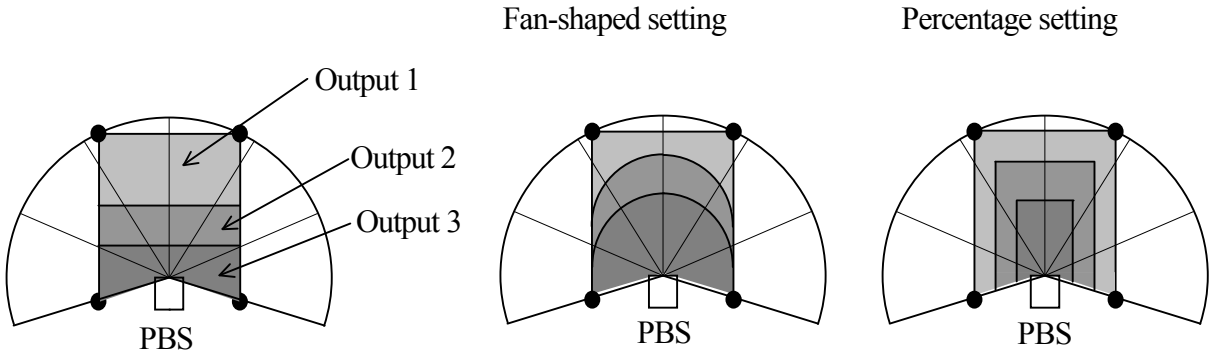

DANGER

* This device can't detect a dead space of view in beam scanning angle. If necessary detecting area isn't enough, don't use it.

CAUTION

* It can set detecting range up to 10m under within 218 degrees but we can't guarantee it.(Guarantee range is the area with vertical direction 0.2 to 3m and width 2m but within scanning angle 180 degrees by white kent paper with 300×300mm. Detecting characteristics are depending on reflectance of detecting object.)
* Area from scanning center of sensor to 0.2m is dead zone and it can't detect.(Setting origin point of detecting distance is the center position of scanning.)

6. Caution for installation

6-1. Relation with cover

Install PBS so that it sticks 50mm or more away out of the cover. If it is 50mm or less, it detect shorter than actual distance. If it can't stick, make detecting area view angle shorter(Within 160 degrees at 40mm or put the black seal on both sides of PBS not to detect cover.

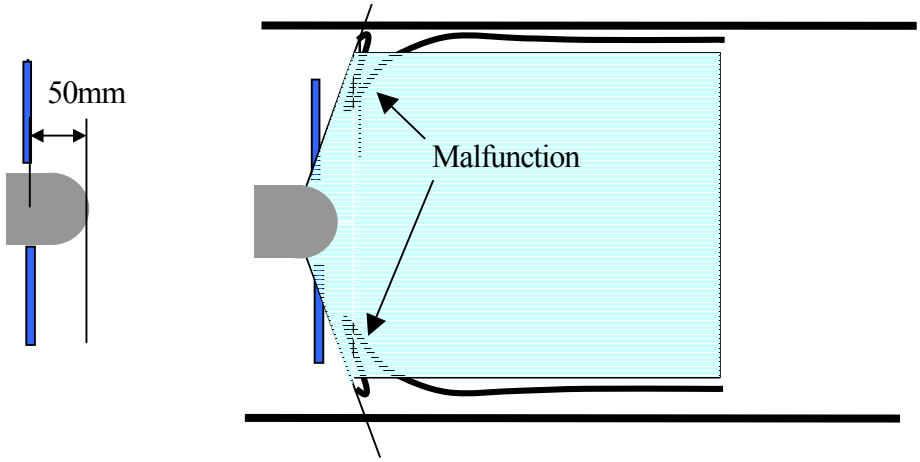

CAUTION

<u>* Install it by sticking the tip of sensor out of AGV's cover etc. 50mm or more(Detection range 180 degrees) away. In case of 160 degrees as detection range, it should be 40mm or more. (Refer to external dimension No.MC-40-3030)</u>

CAUTION

* When installation, don't close light-projection/reception window or interrupt area.
* If cover is used, use cover with high transparency.(It is using LED with wavelength 880nm.)

6-2. Relation with floor surface

Spread of sensor beam is 100mm(Reference value) in diameter at 3m. If it installs PBS near floor surface, it may detect floor surface and may cause malfunction. Install it 60mm or more away. If it is 60mm or less, install it 1 degree upward.

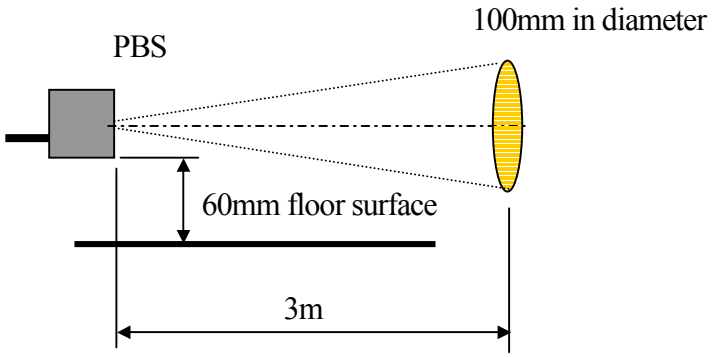

6-3. Optical axis adjustment

It can meet up/down angle with standard of mechanical axis if detecting object will be 300mm×300mm or more. Make an adjusting mechanism in case of sever adjustment. Dispersion of optical axis against mechanical axis is follows:-

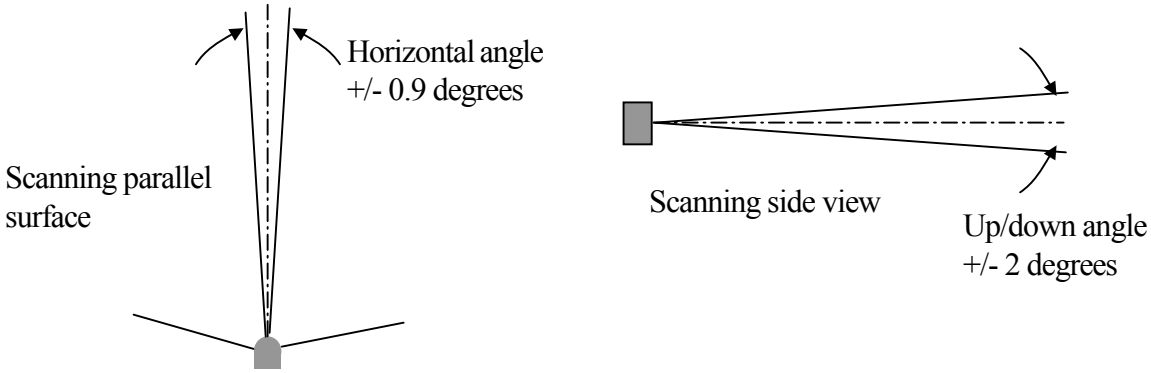

Dispersion between optical axis and mechanical axis

ENFORCEMENT

* Install firmly not to dislocate optical axis by vibration or impact.
* Make a optical axis adjustment and check some operations before use.

6-4. Influence of mirror surface object far away

In case that mirror surface object such as stainless plate or retro-reflecting sheet is existing at 20m far away, it may malfunction. In case that, put black tape in reflecting objects or taka an angle of elevation with 5 degrees or more. If detecting objects is enough size to detect, it can use mirror reflecting avoidance mode.(Refer to item 3.)

7. Mutual interference

If several AGV are running near area, mutual interference occurs by shallow angle of incidence. AGV with 1m width or more can detect the part without interference correctly.

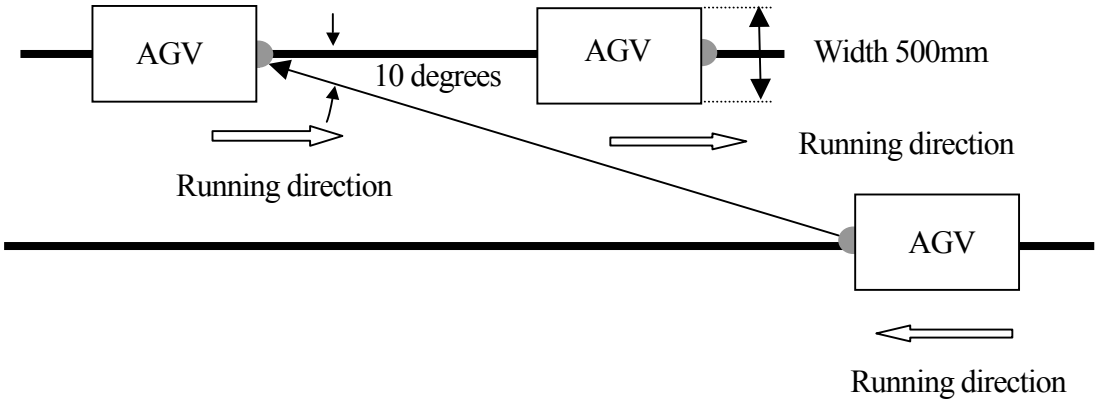

⚠ **CAUTION**

Response time is delayed under much mutual interference.

Take an angle of elevation with 3 degrees or more due to take countermeasures against mutual interference. It is necessary to install them in vertical opposite direction each other so that projecting light with angle of elevation makes opposite direction against other receiving light.

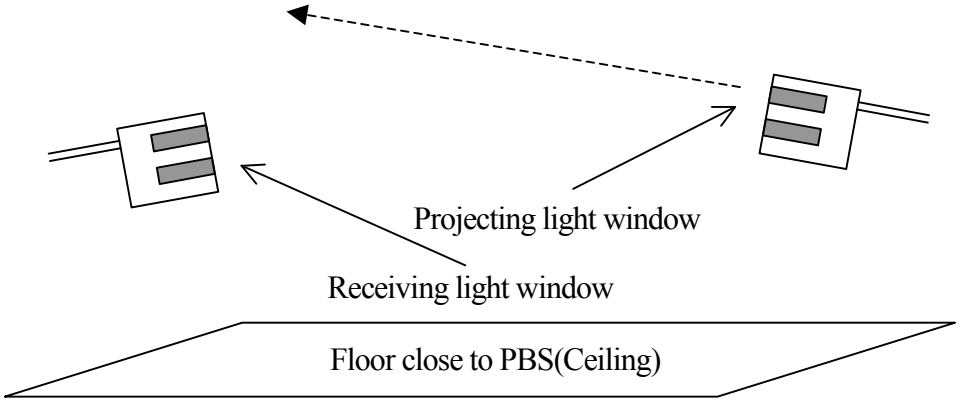

In case of undermentioned applications, don't use 2-scanning mode because response is delayed and AGV's may collide. Use other PBS with low-speed scanning mode due to be 110msec as response delay by interference.

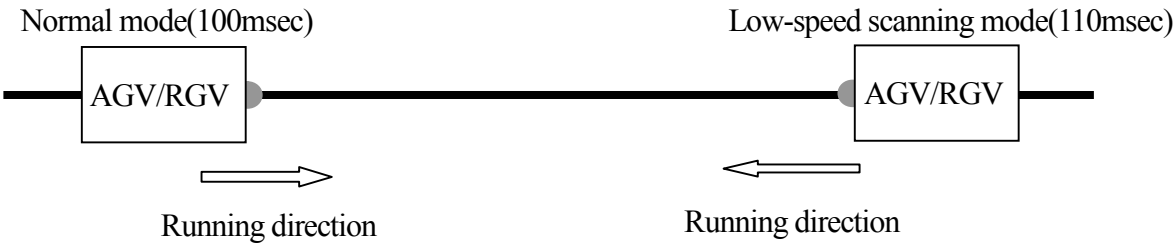

PROHIBITION

Response time is delayed on 2-scanning operating mode under much mutual interference. Don't use 2-scanning operating mode.

8. Pin arrangement of RS-232C

a) Male connector of D-sub with 9 pins

(Right and left is reverse under female connector at cable side)

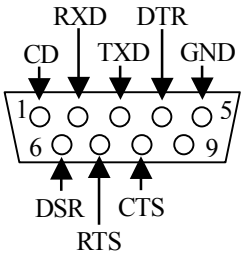

b) Female connector of D-sub with 25 pins

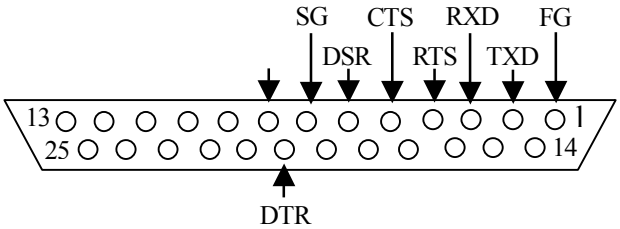

SG : Ground for signal
FG : Frame ground

Contents of RS-232C signal cables

(Direction of I/O and functions seen from PC side)

Signal	I/O	Function
TXD(Transmit Data)	Output	Transmission of serial data
RXD(Receive Data)	Input	Reception of serial data
RTS(Ready to Send)	Output	Request to send data
CTS(Clear to Send)	Input	Response for RTS(Sounded transmission permission)
DTR(Data Terminal Ready)	Output	Request to be ready
DSR(Data Set Ready)	Input	Response for DSR(Check to be ready)
CD(Carrier Detect)	Input	Detection of carrier

CAUTION : Make sure to short-circuit about unused pin among RTS, CTS and CD and between DTR and DSR.

c) Colors and functions of PBS's cable and wiring pattern for pin No. of PC

(Connect the following 3 pcs of pin only)

Color	Signals	Pin No. of D-sub with 9 pins	Pin No. of D-sub with 25 pins
Yellow(Red)	Serial input(RXD)	3(TXD)	2(TXD)
Yellow(Green)	Serial output(TXD)	2(RXD)	3(RXD)
Yellow(Black)	Serial GND	5(GND)	7(SG)

CAUTION : Use cable within 3m between PBS and PC because detection area can't be set by PC.

PROHIBITION

* Don't connect any other cable to RS232C signal cable except when detecting area is set by PC.

9. Input/Output circuit

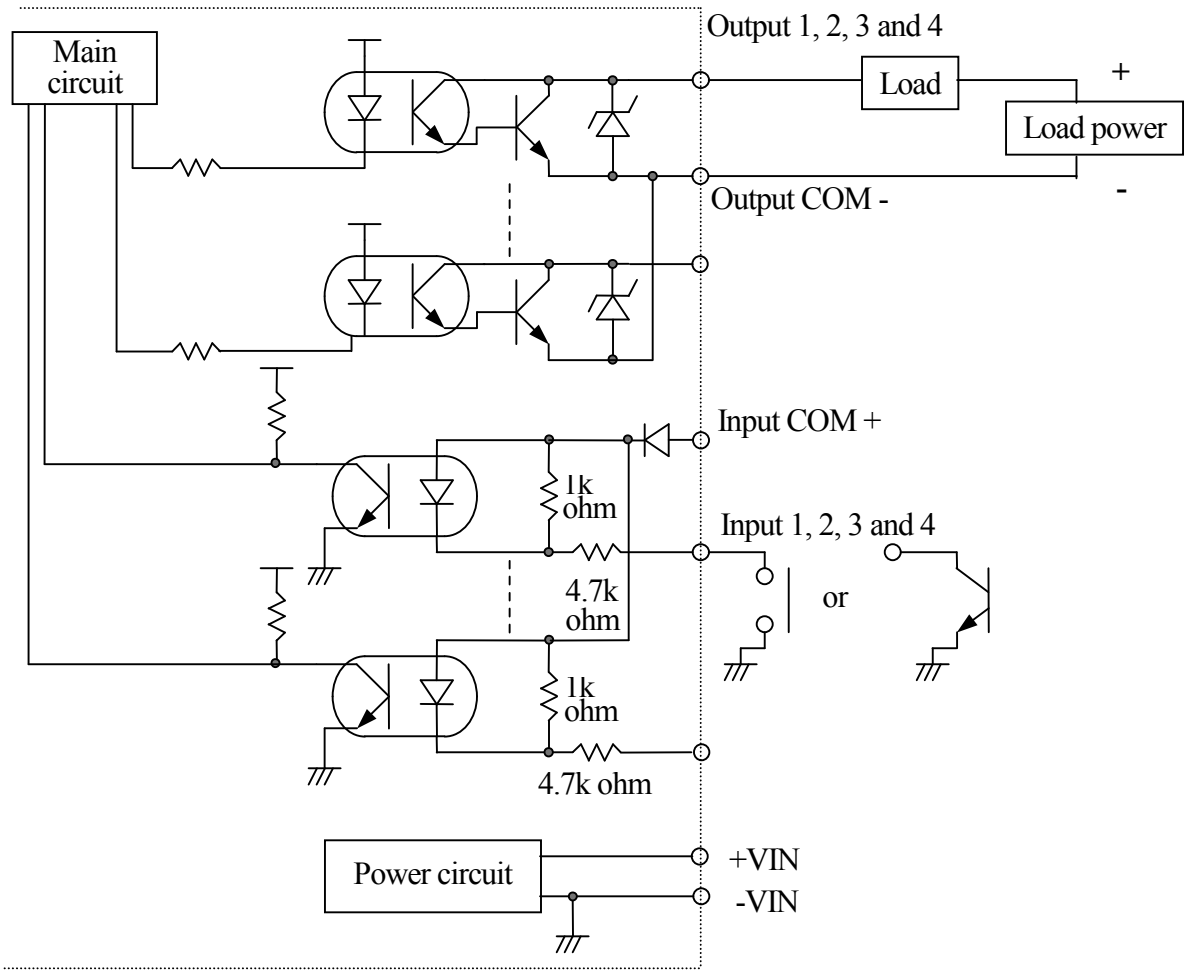

10. Q and A

Q	When PBS receives strong light (specification environment is exceeded) such as the afternoon sun directly, how does output operate?
A	To the direction where a strong disturbance light hit, output executes as no obstacle. About other detection, it operates normally. (It is hardly affected in comparing with our PB6 and PB8).
Q	How about mutual interference between PBS's?
A	Basically, it interferes but it isn't affected by interfering light from except for the direction which interfering light enters because it judges with 1.8 degrees/1 scanning respectively. See item 8 about mutual nterference.
Q	Do you have any countermeasures to prevent interference
A	Take a installation angle to PBS and see about "Mutual interference".
Q	How about the influence to the other sensors?
A	Since this device modulates emission wave length(λ=880nm) with 8/7.5MHz, there are any a possibilities to affect to any device with similar modulation system. If you use it with such device at the same time, check beforehand.

Q	If a detection object is not more than white kent paper with 300 by 300mm, does it operate correctly?
A	The standard of light amount margin is 1.5 times at 3m with 300 by 300mm white kent paper and so it can't detect mourning dress or transparent plate etc. with low reflectance. In case of detecting object such as mirror surface, it can 't detect stably. Moreover, in the case of a detection objects thinner than a width of 300mm, PBS can't detect if detection distance is 3m or more because PBS's beam which becomes fan-shape with equal angle is stepped. However, in case of within 3m, thinner detection object can be detect.(100mm or more at 1m)
Q	What is detecting precision?
A	It is +/- 10cm at within 1m and is +/- 0.1 time against setting value at 1m or more.
Q	Is it possible to set 1m or more for width direction?
A	When area is set for width direction, it is set within 1.5m and check actual area.
Q	When installing PBS, how far can it cover except for light-projection/reception part?
A	If it installs so that it may stick out 50mm or more, there is no problem. Consider installing status, referring scanning angle and the following beam diameters. Since the beam spreads proportionally such as 20mm in diameter for min., 50mm in diameter at 1m and 80mm in diameter at 2m and so install it not to interrupt such area.
Q	Is it possible to use under water splashing?
A	Even if any drop of water attached, it can use after wiping but we can't guarantee to use at the places under any drop of water.
Q	When PBS suddenly receives a strong vibration during operating, how does it operate?
A	It will not affect if it is within 70Hz is less than and double amplitude of 1.5mm (X, Y and Z directions). When motor is getting unstable by over-rated vibration for the above value, detection output is forcibly getting detection state once but if vibration time isn't beyond 1sec., return automatically within 1sec.(When motor is during unstable, power lamp flickers with 0.1sec interval.) During self recovery, for motor rotation to return to the normal state the excitation current will increase for 10 seconds. If "synchronization loss" occurs 4 times (5 times including initial trial) during the recovery process, it is judged that the sensor is abnormal. Moreover, if "loss of synchronization" occurs 10 times within 1200 scans (120 seconds), it is judged that the sensor is abnormal. However, if such trouble(unstable motor) is temporary and there is no damage on motor, trouble output returns after putting power source in again.

11. Trouble

When you felt irregular operation to this device, make sure to stop to use and inspect it. If you couldn't find out any reason, contact our offices. Trouble-shooting is as per following table:-

Trouble	Countermeasure
Power lamp doesn't light up	* Check wiring is correct or not. * Check power source voltage.
Detection output doesn't change	* Check input/output wiring is correct or not. * Check installation is correct or not. * Check setting are is correct or not. * Check area setting that is considered about sensor hysteresis or not. * Check scanning view is within 180 degrees or not on area setting.
Power lamp keeps on flickering	* Device is out of order. Replace it by new one.

13. Reference

Tokyo Office
Shinbashi Ekimae No. 2 Bldg., 2-21-1 Shinbashi, Minato-Ku, Tokyo 105-0004, Japan
Tel : 03-3572-2846
Fax : 03-3572-2734

Nagoya Office
Ryoshin Bldg., 4-8-12 Meieki, Nakamura-Ku, Nagoya 450-0002, Japan
Tel : 052-582-4641
Fax : 052-551-6906

Osaka Office
Osaka HU Bldg., 2-2-5 Tokiwamachi, Chuo-Ku, Osaka 540-0028, Japan
Tel : 06-6947-6336
Fax : 06-6947-6350

Kyushu Office
KMM Bldg., 2-11-15 Asano, Kokurakita-Ku, Kitakyushu 802-0001, Japan
Tel : 093-551-2189
Fax : 093-551-2189